The Cookson Company, Inc.

# MG Operator with Lock Interlock 460VAC 3 Phase Right Hand
## For 1/3HP and 1/2HP

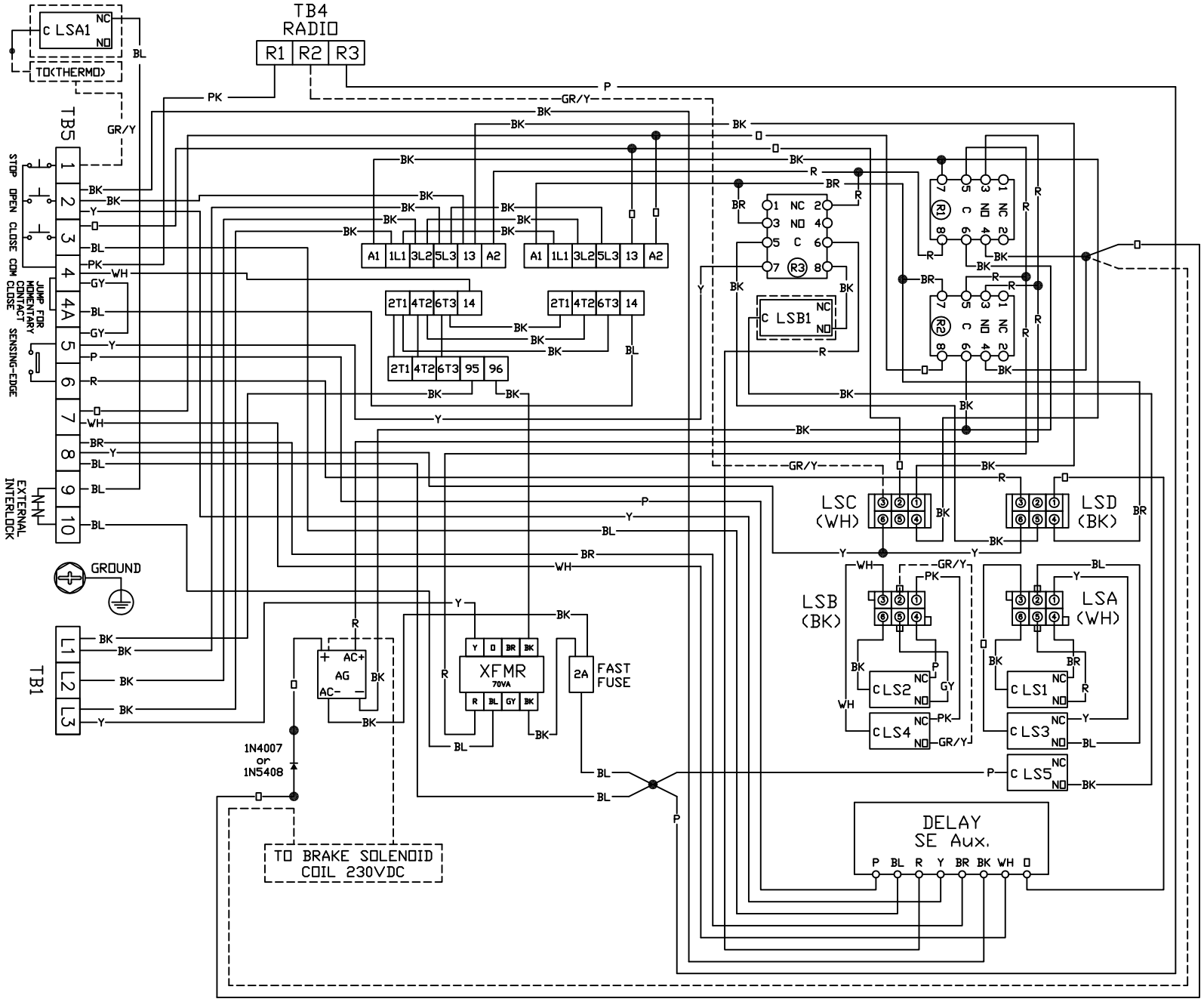


EN 405 R

NOTES:
R1-BRAKE RELAY (COIL 24VAC)
R2-BRAKE RELAY (COIL 24VAC)
R3-INTERLOCK RELAY (COIL 24VAC)
LSA-LS1 & LS3 MICROSWITCH CONNECTOR
LSB-LS2 & LS4 MICROSWITCH CONNECTOR
LSC-OPEN CONTROL CONNECTOR
LSD-CLOSE CONTROL CONNECTOR
LS5-INTERNAL INTERLOCK MICROSWITCH
LSA1-MANUAL CUT-OFF MICROSWITCH
LSB1-INTERNAL INTERLOCK MICROSWITCH

| CONNECTOR PLUG |
|---|
| LSA ⇔ LSD |
| LSB ⇔ LSC |

TERMINAL NUMBER:
1 CONTROL STATION-STOP
2 CONTROL STATION-OPEN
3 CONTROL STATION-CLOSE
4 CONTROL STATION-COMMON
4&4A JUMP FOR MOMENTARY CONTACT CLOSE
5&6 SENSING-EDGE (S.E.) CONNECTION
7&8 DOOR CLOSING WARNING SIGNAL 24VAC
9&10 EXTERNAL INTERLOCK

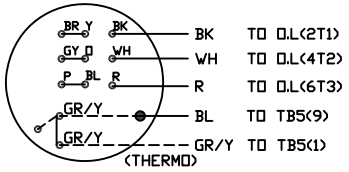


460V 3 PHASE
MOTOR CONNECTION

2008.04.10